ODISHA CONSTRUCTION CORPORATION LIMITED

(A GOVT. OF ODISHA UNDERTAKING)

CENTRAL WORKSHOP: RASULGARH,

BHUBANESWAR-751010 (ODISHA)

TENDER DOCUMENT FOR

Supply of Rubber seal for stoplog of Lower Suktel Irrigation Project

The tender document comprises of the following:

1)	Tender call notice No.OCC/CWS/PROC/ LSIP-12(V-III) / 55 /2026-27 dated 20.11.2026 (including cover page)	03 (Three) sheets
2)	Terms and conditions	03 (Three) sheets
3)	Specifications & Price schedule	01 (One) sheets
4)	Drawing	03(Three) sheets
	Total :	10 (Ten) sheets

Signature of the Tenderer agency or
His/their Power of attorney holder
with designation & seal.

Senior Manager (Mech.)-I
OCC Ltd, Central Workshop,
Rasulgarh, Bhubaneswar-10.

ODISHA CONSTRUCTION CORPORATION LIMITED

(A GOVT. OF ODISHA UNDERTAKING)

CENTRAL WORKSHOP, RASULGARH,

BHUBANESWAR-751010 (ODISHA)

TENDER CALL NOTICE No. OCC/CWS/PROC/ LSIP-12(V-III) / 55 /2026-27 Dated 20.11.2026

Sealed Tender (through Speed Post) / (through Password protected email) in conformity with the terms & conditions are invited from the reputed manufacturers / authorized dealers / traders / stockiest / distributor for "**Supply of Rubber seal for stoplog of Ramanadi weir of Chheligada Irrigation Project "** as per details below:

Cost of Tender Document (Non-refundable)	Sale of Tender Document		Earnest money deposit (EMD) required	Receipt of Tender	Opening of Technical & Price Bid of Tender
Rs. 600/- + GST @ 18% **(Rs.708/-** by hand, **Rs.808/-** by Speed Post)	From **20.11.2026 (10.30AM o**nwards**)**	To **30.11.2026** (up to 1.00 **PM)**	1(One)% of the total quoted value including GST	On **30.11.2026 (**upto **3.30 PM)**	On **30.11.2026 (4.00 PM** onwards **)**

1. Tender document can be purchased by the interested reputed manufacturers / authorized dealers /traders / stockiest / distributor by hand from the office of the undersigned on payment of cost of tender document i.e. **Rs.600/-** + GST @ 18% amounting to **Rs.708/-** in cash or in shape of A/c. payee demand draft on any Nationalised Bank / Scheduled Bank payable at Bhubaneswar (Non-refundable) drawn in favour of "**Odisha Construction Corporation Limited - Project Account"** and on production of attested copies of the following documents and verification thereof by the undersigned.
   a) Valid GST Registration Certificate.
   b) PAN Card.

2. The tender document can also be obtained by the interested reputed manufacturers / authorized dealers / traders / stockiest / distributor by Speed Post on sending the cost of tender document i.e. **Rs.600/-** + GST @ 18% and postage charges of **Rs.100/-** amounting to **Rs.808/-** in shape of A/c. payee demand draft drawn on any Nationalised Bank / Scheduled Bank payable at Bhubaneswar (Non-refundable) drawn in favour of "**Odisha Construction Corporation Limited - Project Account"** and self attested copies of the following documents and verification thereof by the undersigned.
   a) Valid GST Registration Certificate.
   b) PAN Card.

3. The tender document can also be downloaded from our Website **www.odishaconstruction.com** to submit the tender .

4. The tender document should be submitted only through Speed Post along with the following self attested hard copies / Email along with the following self attested scan copies mail ID (**smcwsoccltender@gmail.com**) within stipulated date and time . The undersigned will not be responsible for any kind of delay by the postal authorities or any technical issue of website.
   a) Valid GST Registration Certificate.
   b) PAN Card.

5. Bidders are requested to visit OCCL website regularly for addendum and corrigendum since any changes will not be published in news paper.

The Tenderer should submit tender cost along with self attested photo copies of above documents. The Envelope-I / Enclosure (Technical) will contain complete tender document along with all above required documents, EMD and cost of tender documents. The Envelope -II / Enclosure (Financial) will contain only financial Bid, otherwise, the offer shall not be considered and OCCL will not be responsible for missing of any pages .

Signature of the Tenderer agency or His/their Power of attorney holder with designation & seal.

Senior Manager (Mech.)-I
OCC Ltd, Central Workshop,
Rasulgarh, Bhubaneswar-10.

6. If there will be a public holiday on the last date of sale of tender document and receipt & opening of the tender as specified above, the tender document will be sold and tender will be received & opened on the next working day at the same time and venue.

7. The SSI/NSIC/MSME units participating in tender are not entitled for exemption from payment of EMD/ Security Deposits/ Tender Paper costs as communicated vide DOWR Letter No. IIM-24/2018-14318/WR dated 24.05.2018 & Head Office, OCCL Letter No.5502/OCC/ CW-02/09(Vol-V)(WE) dated 30.05.2018.

8. The tenders will be opened in the presence of the tenderers or their authorised representatives. Tender through Fax/Telex/telegram will not be accepted .

9. The undersigned reserves the right to accept or reject any or all tenders without assigning any reason thereof

Signature of the Tenderer agency or
His/their Power of attorney holder
with designation & seal.

Senior Manager (Mech.)-I
OCC Ltd, Central Workshop,
Rasulgarh, Bhubaneswar-10.

ODISHA CONSTRUCTION CORPORATION LIMITED

(A GOVT. OF ODISHA UNDERTAKING)

CENTRAL WORKSHOP, RASULGARH,BHUBANESWAR-751010 (ODISHA)

TERMS AND CONDITIONS OF TENDER FOR

" Supply of Rubber seal for stoplog of Lower Suktel Irrigation Project "

1. Reputed manufacturers or their authorized dealers / traders / stockiest / distributor having supplied similar items of similar magnitude earlier and satisfactorily accepted by the clients will be eligible to participate in the tender. The copies of purchase orders, credentials, certificates etc. in support of similar supply and satisfactory performance thereof will be furnished along with the tender.

2. The tenderer should submit Earnest Money Deposit (EMD) @ 1(One)% of the total quoted value along with the tender in shape of N.S.C. / Postal office TDR / Bank Time Deposit Account / Kisan Vikas Patra / Bank Guarantee / Demand draft in favour of Odisha Construction Corporation limited- Project Account from any Nationalized Scheduled Bank in India counter guaranteed by its local branch at Bhubaneswar / e-Bank Guarantee executed on the National e-Governance Service Limited (NeSL) Digital Document Execution Portal/ FD / TDR pledged in favour of the undersigned. The tenders received without EMD will be out rightly rejected. EMD of the unsuccessful tenderers will be released only after finalization of the tender.

3. For submission of tender through Speed Post, the outer cover should be sealed and subscribe in bold letters as " **Supply of Rubber seal for stoplog of Lower Suktel Irrigation Project** " and also date of opening of tender. The name and address of the tenderer should not be written on outer cover. Only the name and address of the purchaser should be written on the outer cover.

4. The offer should contain the following copies:
   a) Valid GST Registration Certificate (self attested).
   b) PAN Card (self attested).
   c) Purchase orders, credentials, certificates etc. in support of supply of similar items of similar magnitude during any one financial years for last 5 financial years(i.e. from financial year 2021-22 to 2025-26) (self attested).
   d) The original terms & conditions, price schedule duly signed by the tenderer, without which the offer will not be considered .
   e) EMD of 1% as per clause- 2 above

5. The tenderer will quote their rates F.O.R. OCCL Store, Central Workshop, Rasulgarh, Bhubaneswar indicating separately the basic price per each inclusive of packing, forwarding, transportation, transit insurance and handling charges & GST, duties, levies etc. strictly in the detailed specifications and price schedule format in original. All columns and lines of the price schedule should be filled in properly without leaving anything blank. The details and rates of duties, taxes and levies etc. should be indicated clearly in the price schedule.

6. The tender document should be submitted a) through Speed Post along with the required self attested hard copies b) through email ID (**smcwsoccltender@gmail.com**) (different password protected for technical and financial Bid along with the required self attested scan copies within stipulated date and time . The undersigned will not be responsible for any kind of delay by the postal authorities or any technical issue of website.

7. The Tenderer should submit tender cost along with self attested photo copies of above documents. The Envelope-I / Enclosure (Technical) will contain complete tender document along with all above required documents, EMD and cost of tender documents. The Envelope -II / Enclosure (Financial) will contain only financial Bid, otherwise, the offer shall not be considered and OCCL will not be responsible for missing of any pages .

8. The Bid documents (technical bid & price bid) submitted through e-mail by the bidders must be password protected & the password is to be set by the Bidder himself.

9. The Bid documents (technical bid & price bid) will be opened in presence of the interested bidders on the scheduled date and time as mentioned in the tender.

Signature of the Tenderer agency or
His/their Power of attorney holder
with designation & seal.

Senior Manager (Mech.)-I
OCC Ltd, Central Workshop,
Rasulgarh, Bhubaneswar-10.

10. The password is to be revealed or intimated by the tenderer or Bidder at the time of opening of price Bid documents.

11. The Bids received through e-mail without password will be out-rightly rejected.

12. The materials should be strictly confirming to relevant standard of Bureau of Indian Standard (BIS) & specification, size and grade etc. as mentioned in price schedule format enclosed to the tender schedule.

13. If required the materials may be tested in Govt. Testing laboratory by the consignee at the cost of supplier and if the materials are found not in accordance with the BIS specification, size & grade, the materials will be rejected

14. The materials will be guaranteed by the supplier against any defect for a period of 18 months from the date of supply or 12 months from the date of use, whichever is earlier. Guarantee certificate in this regard will accompany with supply of materials. If any defect is found in the materials within the guarantee period, the same will have to be replaced free of cost by the supplier within a suitable time fixed by the purchaser.

15. The rate should be quoted by the tenderer on unit basis only, failing which the offer shall not taken into consideration. In no case the materials shall be received less than the required quantity in Nos. However, in case of any variation in weight that can be considered subject to proper specification of material and also materials in Nos. shall not less than the actual quantity. Further, in case of any irregularities noticed in materials due to under weight, uneven threading, size variation etc. the same shall be out rightly rejected. The tenderer should also mention the make of the items against each to be supplied / rate quoted on the space provided in price schedule format,

16. The materials shall be inspected and certified by the purchaser at the premises of Central Workshop, Rasulgarh basing on approved specifications/ IS / ISO as per instructions of concerned Engineer-in-Charge.

17. The tenderer who will participate through email (**smcwsoccltender@gmail.com**), must upload all the self attested technical Bid documents in one Enclosure (Technical) and the Price schedule in another Enclosure (Financial). The tenderer (participated through e-mail) will scan the relevant documents and upload the same along with password protection. Subject of the Email should be "**Tender for Supply of Rubber seal for stoplog of Lower Suktel Irrigation Project** ".

18. Original copy of tender, tender paper cost must submitted to the undersigned within 05(five) days of opening of tender, otherwise bid shall be rejected and the Bidder will be debarred for participation in any future tender.

19. The tenders will be received and opened in the office of the undersigned as per the information in the table of tender call notice in presence of the Tenderer or their authorized representatives, if they so desire.

20. If there will be a public holiday on the last date of sale of tender document and receipt & opening of the tenders as specified above, the tender document will be sold and tenders will be received & opened on the next working day at the same time and venue.

21. The tenderer should quote appropriate taxes with the offer.

22. The rates and amounts should be quoted both in figures and words in the price schedule. Any correction or overwriting in the specification and price schedule should be duly certified by the tenderer or his power of attorney holder. In case of any mismatch in figures and words, the rates in words will be considered. In case of any mismatch in rates and amount, the rate will be considered.

23. The materials shall be guaranted by the tenderers for a period of 18 months from the date of supply or 12 months from the date of erection and use, whichever is earlier. Guarantee certificate in this regard shall accompany with supply.

24. Fasteners must be supplied strictly confirming to relevant details specifications and technical data along with the tender.

Signature of the Tenderer agency or
His/their Power of attorney holder
with designation & seal.

Senior Manager (Mech.)-I
OCC Ltd, Central Workshop,
Rasulgarh, Bhubaneswar-10.

25. The tenderer shall quote their rates F.O.R. OCCL Store, Central Workshop, Rasulgarh,Bhubaneswar-10, Odisha inclusive of P & F, transportation, transit insurance, handling charges, unloading charges, taxes etc., duties, levies etc. However duties and taxes should be indicated separately besides the basic price per each in the tender paper strictly in the detailed specifications and price schedule format. All columns and lines of the price schedule should be filled in properly without leaving any column blank.

26. 90% payment will be made within 30 days of receipt, verification and acceptance of the complete materials along with bill, test certificate, guarantee certificate and other documents. Balance 10% payment shall be released within 90 (Ninety) days from the date of receipt of materials at store, OCCL, Central Workshop, Rasulgarh, Bhubaneswar. No advance payment shall be made under any circumstances.
27. The validity of the offer should be for a period of 120 (One hundred twenty) days from the date of opening of the tender.

28. The complete ordered quantity shall be supplied by the successful tenderer within 30 (Thirty) days from the date of issue of purchase order failing which the order is liable for cancellation without assigning any reason thereof by the purchaser. In case of cancellation of the order the EMD will be forfeited. In case of any delay in supply of material beyond the delivery schedule whatever may the reason, supplier shall be liable to pay L.D. @ 0.5% (Half percent) of the total order value per week of delay or part thereof subject to a maximum of 5% (Five percent) of the total order value.

29. Tender through fax/telex/telegram will not be accepted.

30. Purchase order may be cancelled in case any material is found defective and not replaced by the tenderer within a suitable time fixed by the Corporation without any extra cost. In this connection, the decision of the purchaser is final and binding on the tenderer.

31. Price escalation will not be allowed under any other circumstances . The quoted rates will remain firm till execution of the purchase order.

32. The purchaser may increase / decrease the number of items/ quantity to be supplied by the successful tenderer as quantified in detailed technical specification of the price schedule.

33. The authority reserves the right to accept/reject any or all tenders without assigning any reason thereof. The required quantity of materials can be splitted among the two or more tenderers. In this connection, the decision of purchaser is final and binding on the tenderer.

34. Conditional offers with deviations will not be accepted. Those, who do not agree to the terms and regarding payments, delivery and others, need not quote.

35. Any dispute arising out of this tender or order thereof is to be settled in proper court under the jurisdiction of Odisha High Court at Cuttack or courts under the jurisdiction of Odisha High Court at Bhubaneswar only.

Signature of the Tenderer agency or
His/their Power of attorney holder
with designation & seal.

Senior Manager (Mech.)-I
OCC Ltd, Central Workshop,
Rasulgarh, Bhubaneswar-10.

TO BE FURNISHED IN ORIGINAL
IN SECOND ENVELOPE.

ODISHA CONSTRUCTION CORPORATION LTD.

(A GOVT. OF ODISHA UNDERTAKING)

CENTRAL WORKSHOP,RASULGARH,BHUBANESWAR-751010 (ODISHA)

DETAILED SPECIFICATION & PRICE SCHEDULE FOR

" Supply of Rubber seal for stoplog of Lower Suktel Irrigation Project "

VIDE TCN No.OCC/CWS/PROC/ LSIP-12(V-III) / 55 /2026-27 DATED 20.11.2026 DUE ON 30.11.2026

Sl. No.	Part No.	Description of item	Unit	Qty.	Rate per each unit in Rupees						Total amount for full quantity	
					Basic Price	P&F, trans., transit insurance, handling charges, incidental charges etc.	Duties with details including percentage applicable	GST as applicable	In figures	In words	In figures	In words
1	5-1	Side seal - 1264 mm long - As per drawing natural or synthetic rubber conforming to IS : 11855 - 1986	Nos.	20								
2	5-4	Bottom seal - 12154 mm long - As per drawing natural or synthetic rubber conforming to IS : 11855 - 1986	Nos.	1								
3	6-4	Bottom seal - 12154 mm long - As per drawing natural or synthetic rubber conforming to IS : 11855 - 1986	Nos.	9								

Signature of the tenderer or his/their Power of attorney holder with designation & seal.

Senior Manager (Mech.)-I
OCC Ltd, Central Workshop,
Rasulgarh, Bhubaneswar-751010.

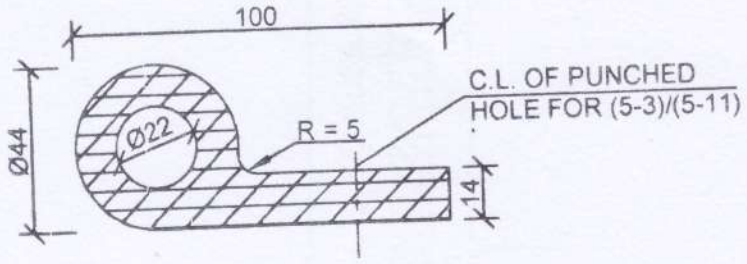

SIDE SEAL(5-1)

MATL.:- NATURAL OR SYNTHETIC
RUBBER CONFORMING TO IS:11855-1986

Total quantity - 20 nos.
Length - 1264 mm for each

12000 mm x 1160 stoplog for
Spillway, Lower tufail
irrigation project.

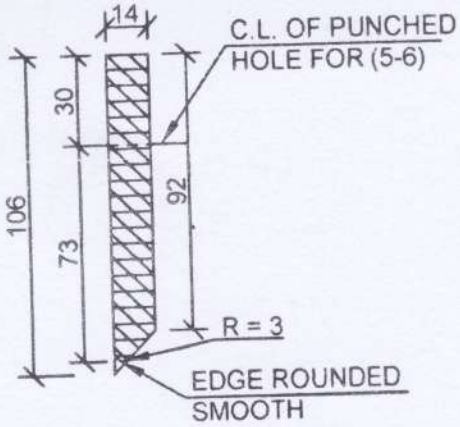

BOTTOM SEAL(5-4) (BOTTOM LEAF).

MATL.:- NATURAL OR SYNTHETIC
RUBBER CONFORMING TO IS:11855-1986

Total quantity = 01 (ONE) NO.

Length - 12154 mm for each

12000 mm x 1160 mm Stoplog
for spillway, Lower Suktel
irrigation project.

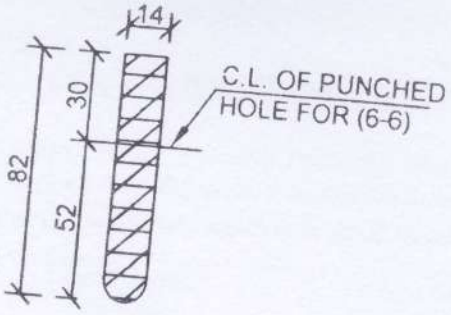

BOTTOM SEAL(6-4) (INTERCHANGEBLE)

MATL.:- NATURAL OR SYNTHETIC RUBBER CONFORMING TO IS:11855-1986

LEAF

QTY REQD = 09 (NINE) NOS

LENGTH = 1254 mm (EACH)

12000 mm X 1160 mm Slop Gate for Spillway
Lower Suktel irrigation Project